Installation

Telematix Drive Recorder

Please read carefully for safe install of the OC3.

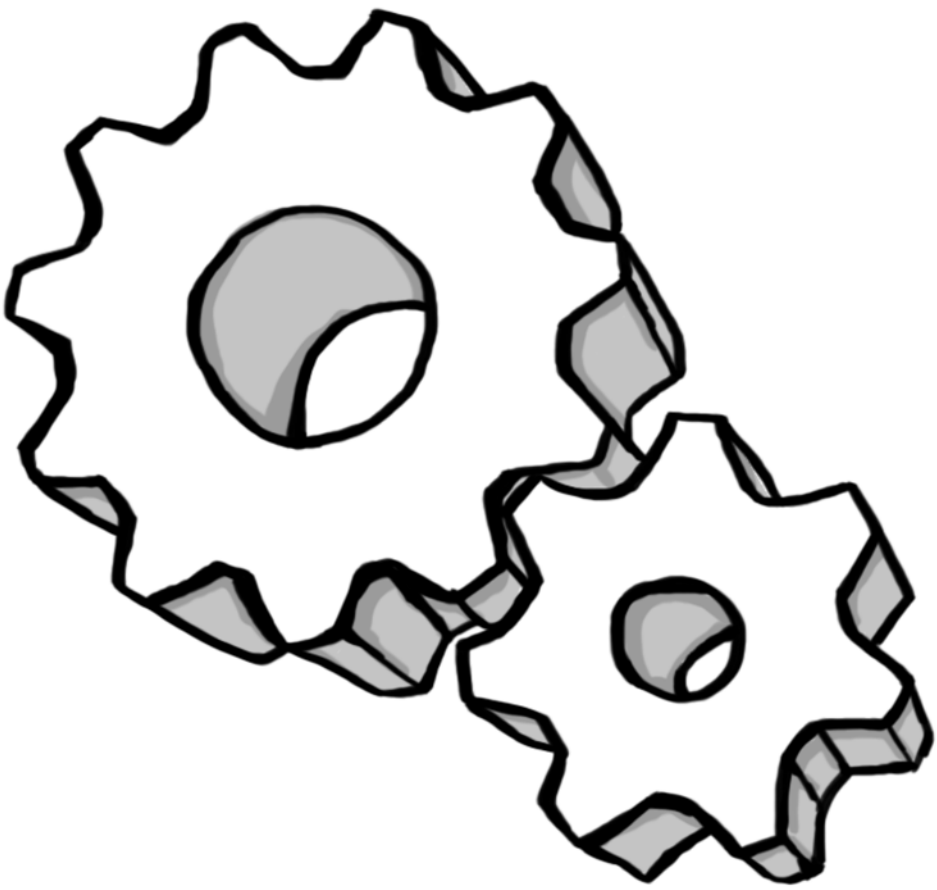

Installation of the OC3

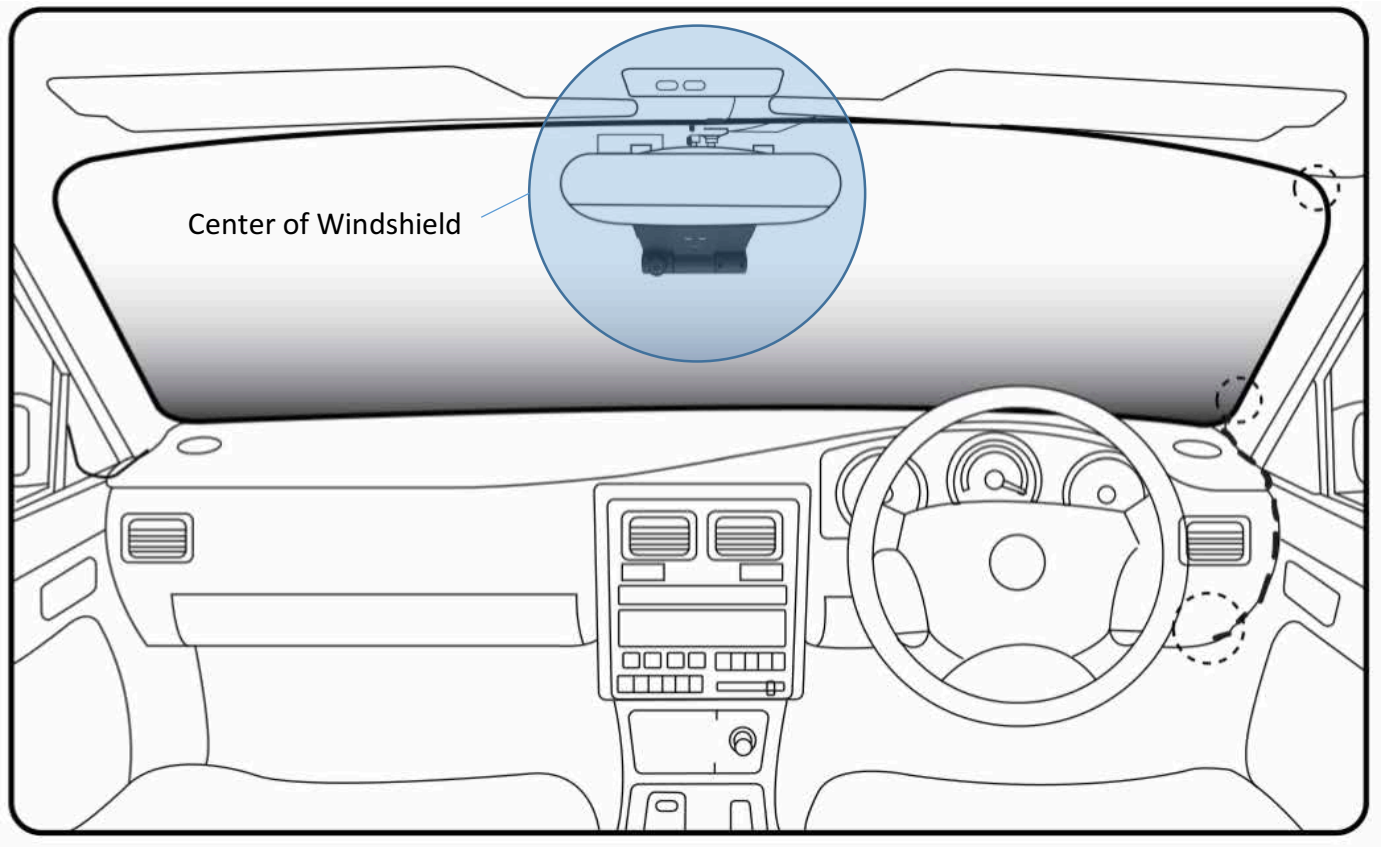

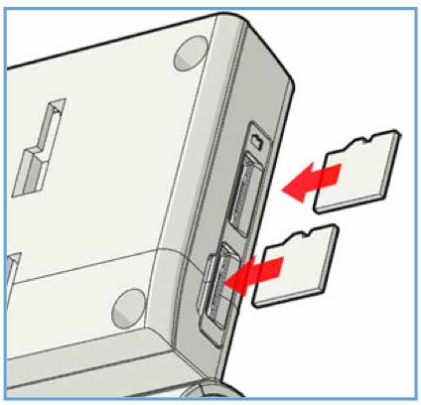

1. Insert micro SD card(s)

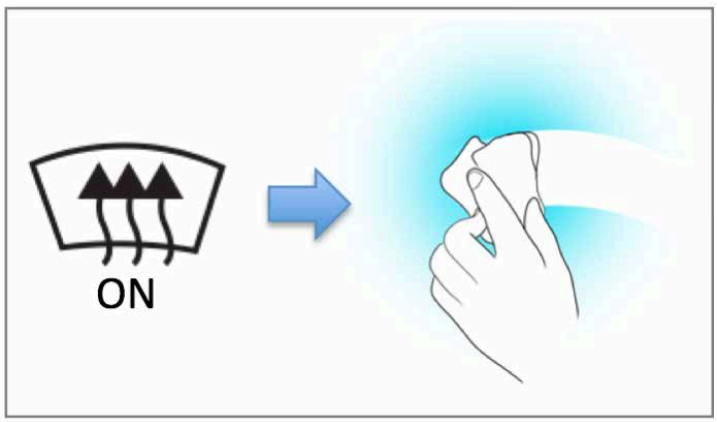

2. Clean and dry windshield
(Air condition vehicle in case of high humidity)

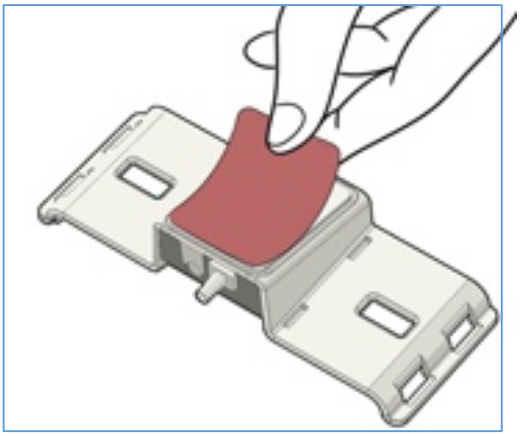

3. Remove adhesive film from adhered area of cradle.

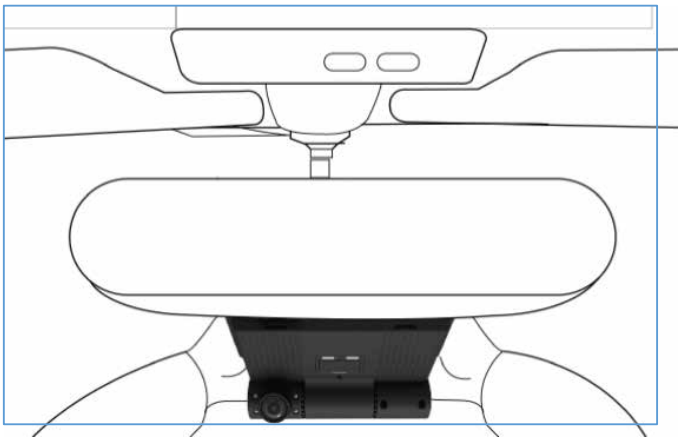

4. Mount device to windshield in front of the rearview mirror.

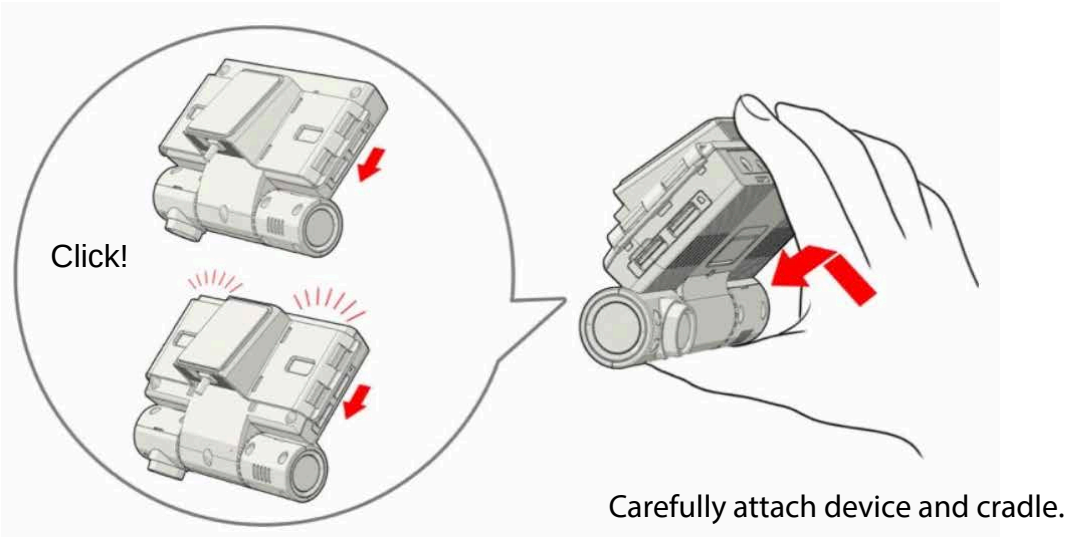

Carefully attach device and cradle.

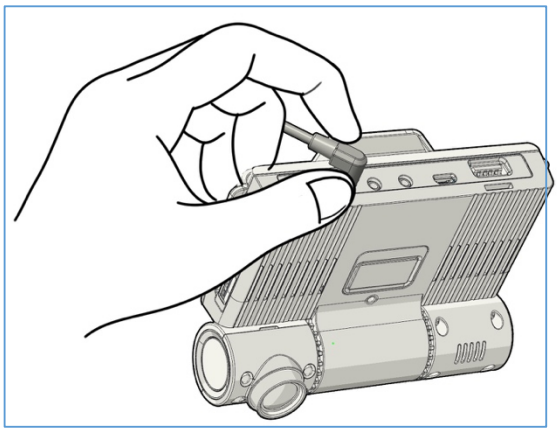

5. Plug in GPS cable jack

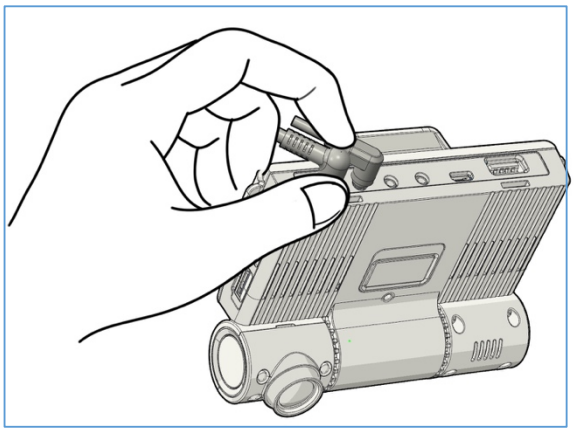

6. Plug in DC Power cable jack

The cradle for the OC3 is designed for multi direction use.

Installation instructions are shown below to assist with correct video angle.

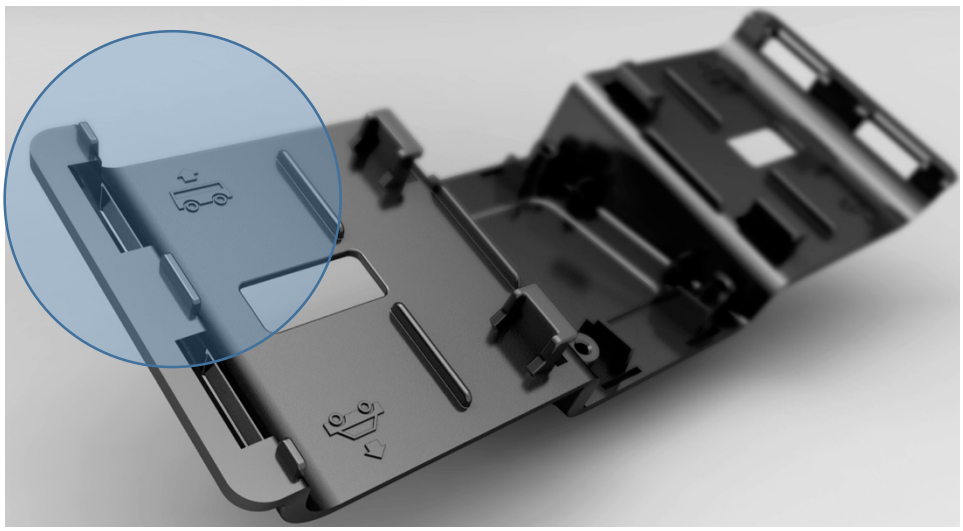

Refer to installation guide on the backside of cradle.

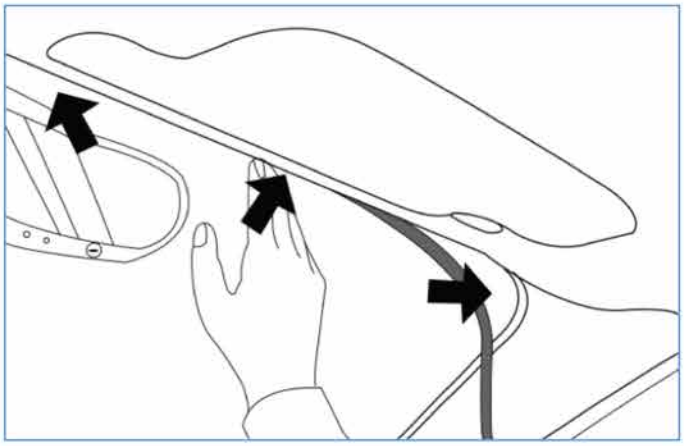

7. Tuck power cable into the windshield and inside roof frame.

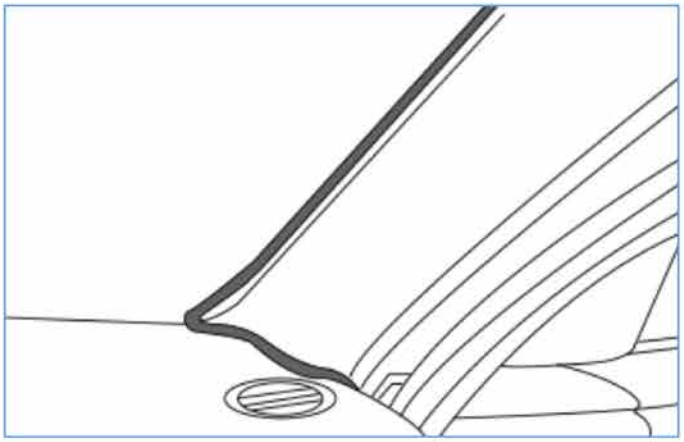

8. Continue to tuck power cable into windshield frame.

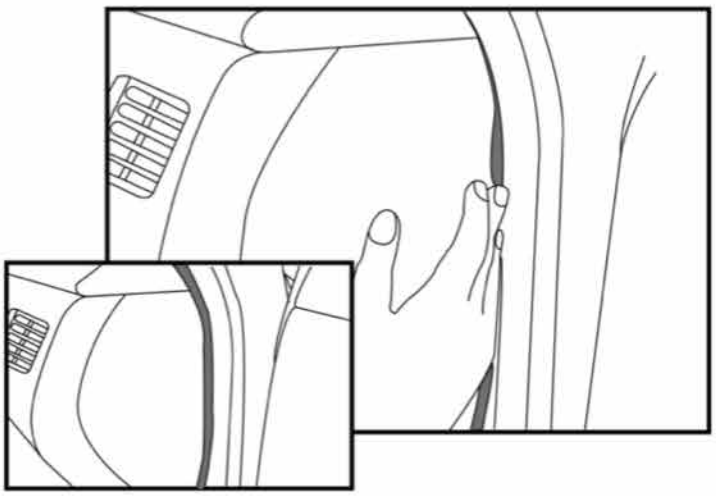

9. Insert power cable into the doorframe on drivers side.

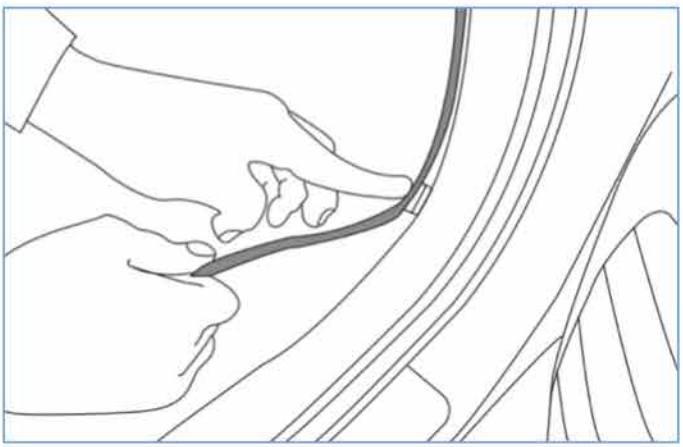

10. Continue to tuck power into the doorframe.

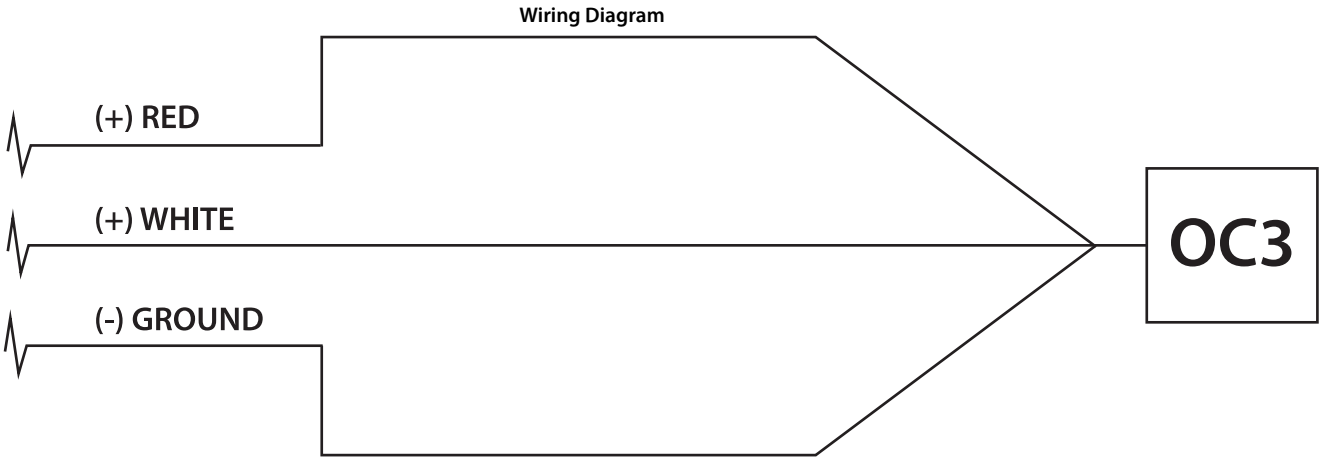

Wiring Guide for using Timer Option:

1. (+) RED wire must be connected to constant power. E.g. - directly to vehicle battery.

2. (+) WHITE wire must be connected to ignition power. This connection connects to a source where when the vehicle is turned off, this connected line shuts off. Line is on when the vehicle is turned on.

3. (-) GROUND wire must be connected to a minus terminal.

NOTE: For wiring in this manner, you must utilize the "timer" function. Not utilizing the timer function of wiring in this way will result in the camera never shutting down. This will cause the OC3 camera system to improperly function.

Wiring Guide for ignition ON/OFF:

1. (+) RED and +(WHITE) must be connected to ignition power source. Installers cannot connect to any permanent power source – doing so will result in a camera malfunction.

2. (-) GROUND wire must be connected to a minus terminal.

Wiring Guide for the OBD Hotspot (on board display hotspot):

1. (+) RED to ignition power source.

2. (-) BLACK to minus terminal.

Please Read Carefully:

- The OC3 will NOT function properly if any connections of the (+) RED, (+) WHITE, (-) GROUND from the provided power cable is connected improperly. All connections must be within the tracking unit specs as per industry related connections.

- The OC3 must NOT be connected to permantent power source for 24/7 recording. Doing so will void the manufactures warranty.

- Please refer to our user manual on our website at www.omnisecuritycam.com

Safety Precautions

- Do not install the product or adjust volume while driving, this may cause accidents.
- Remove dust from 12-Volt power socket as this may cause a fire.
- Check device often. Vibrations can lead to disconnection and may cause personal injury and/or damage to product.
- Carefully handle the device and accessories. Omni Cam is not liable for any injury or damage due to careless handling of the product.

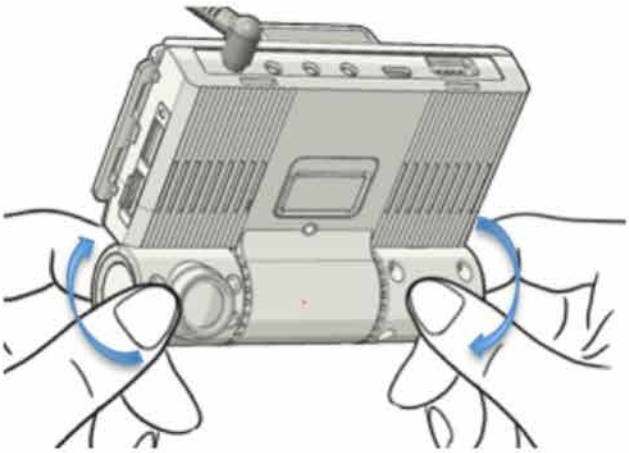

☑ Do not touch camera lens. Fingerprints or contaminated substances will obstruct video viewing.

Joint Tamper-proof Kit

1. Properly fit tamperproof case over camera angle holes to adjust angles.

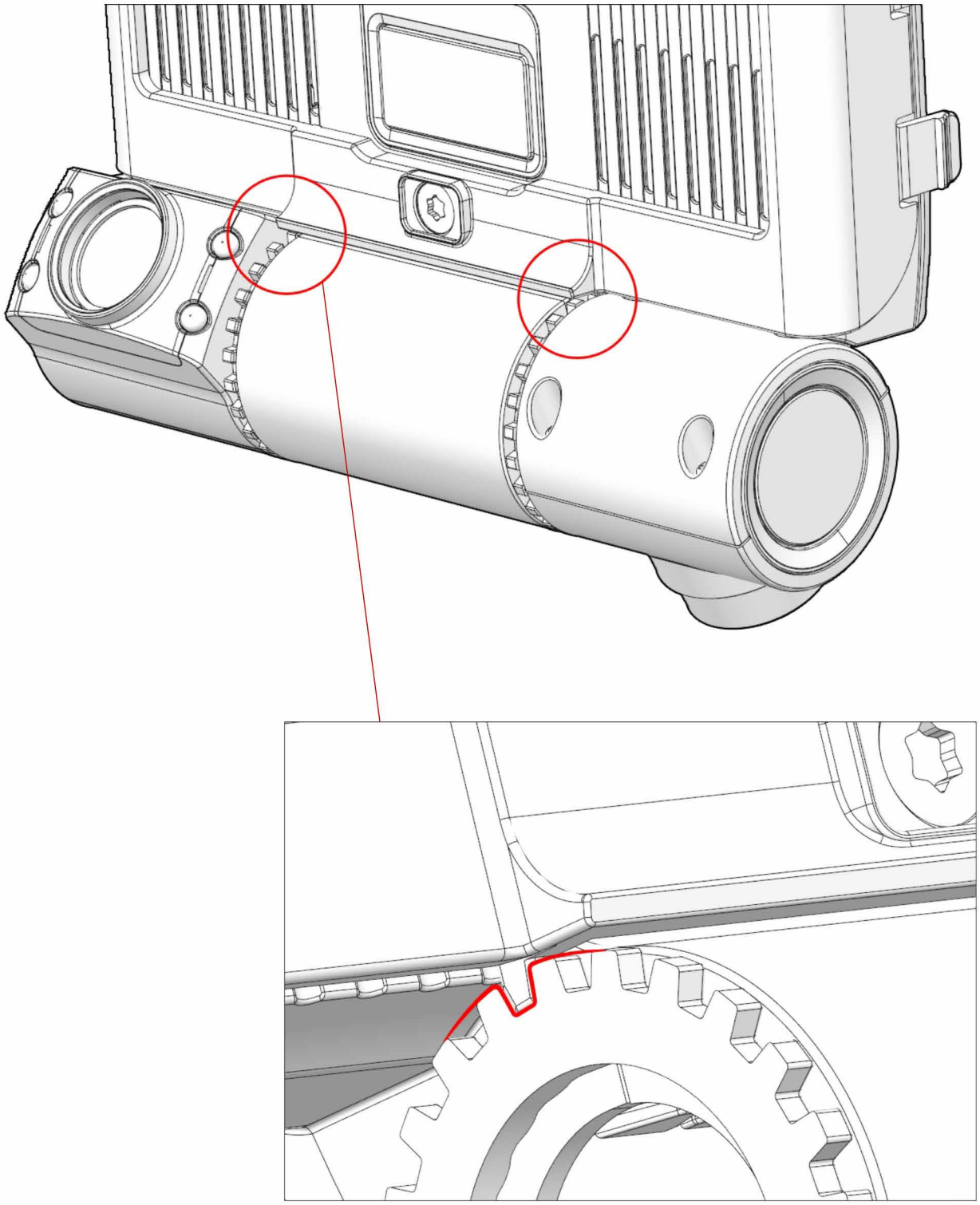

② **Snap tamperproof case to GPS cradle clip.**

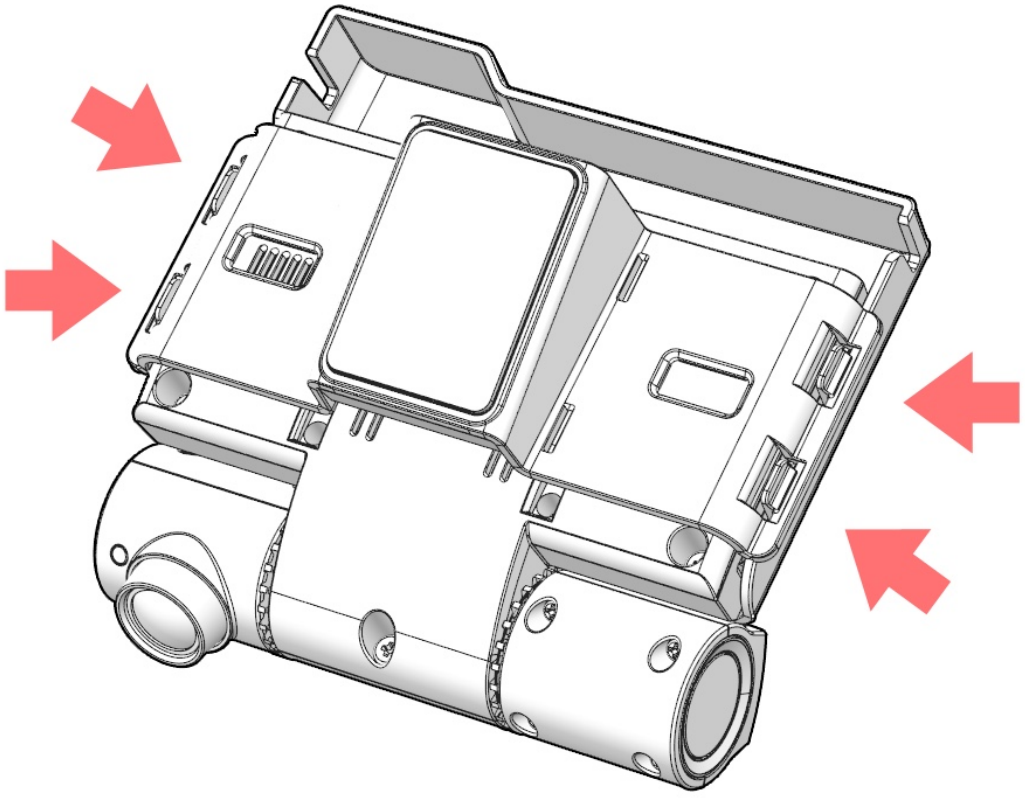

③ **Lock the bolt to the tamperproof case with a wrench.**

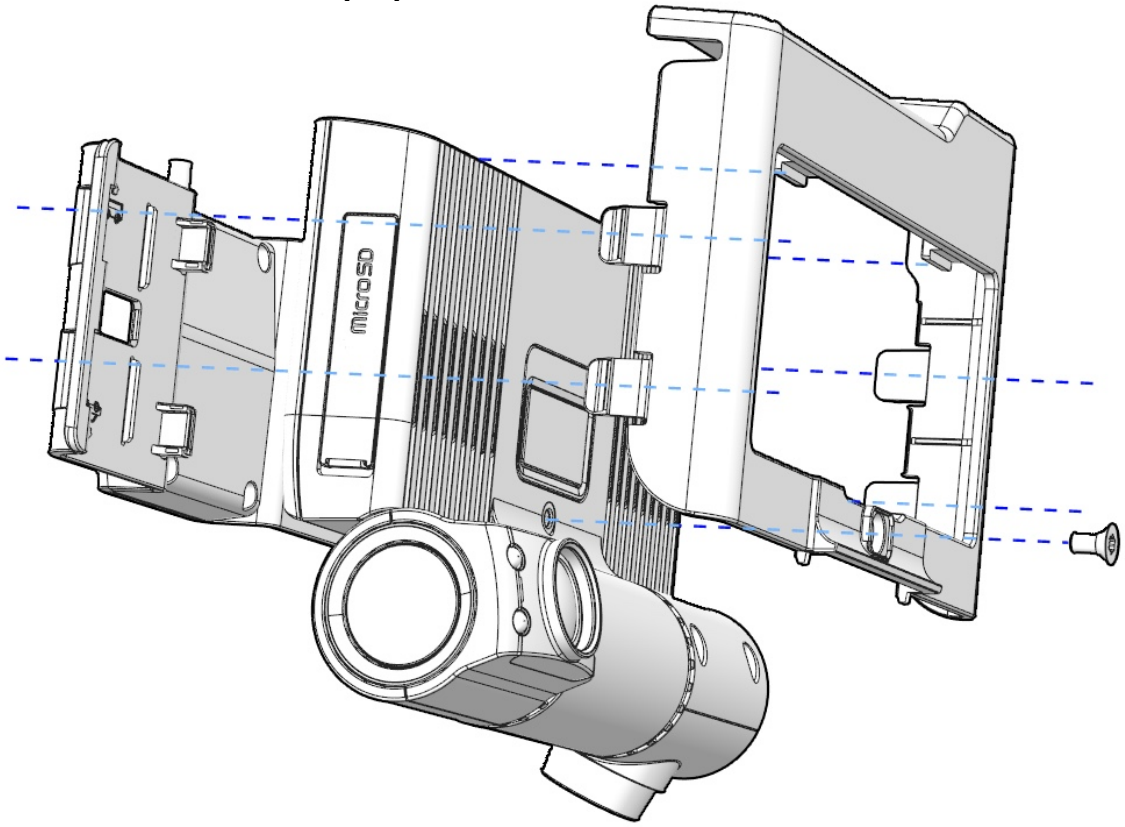

LED Signals

Telematix Drive Recorder

The OC3 has LED lamps for operating signals.

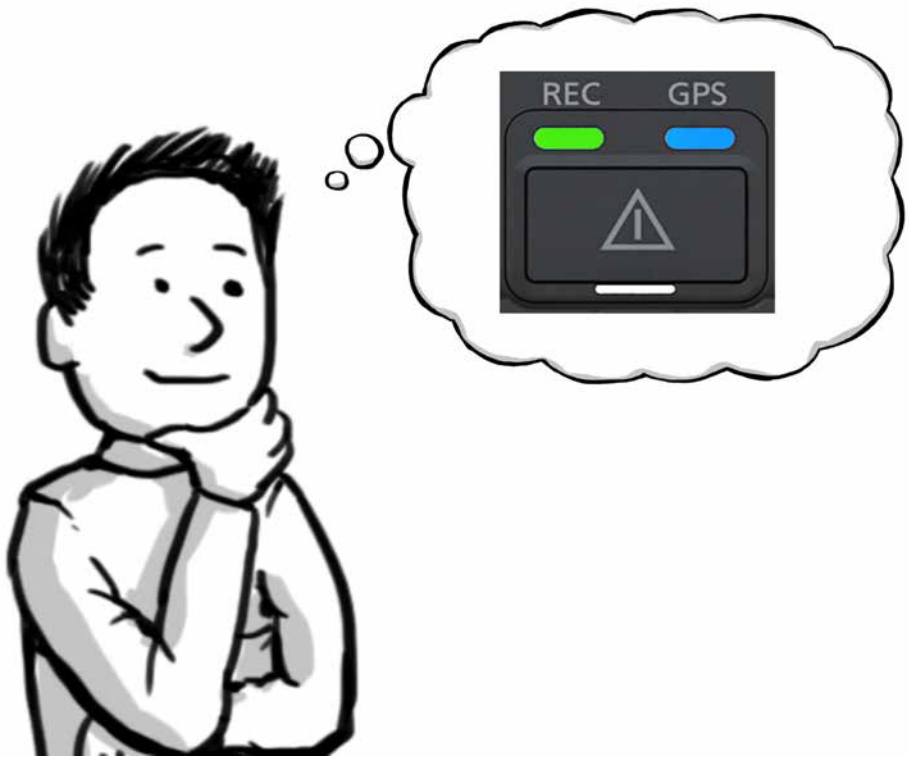

LED SIGNALS

START UP

The LEDs are indiate sytem operating state.

Power On | System Booting | Recording

LED State of System Boot

Power On
Boot System

This LED signal is in normal start state for the OC3.

UPDATE SET-UP FILES

The LEDs indicate th set-up configuration value. (Setup.cfg)

Reading set-up file | Recording

GPS SIGNAL DECTECTION

The LEDs indicates a receiving GPS Signal

Recieving GPS Signal
(Blue LED hold)

LED SIGNALS TABLE

Blinking

Operating	LED	Operating	LED
System Booting (Approx. 5sec.)		Connecting External Device	
Re-booting (Approx. 20sec.)		Not inserted memory card	
Firmware updating (Approx. 40sec.)		GPS signal detected	
Normal Recording		Event Recording (Approx.15sec.)	
USB Backup		USB Backup completed	

TROUBLE SHOOTING

1. System/Camera Start Up (Constant Flashing Green Light)
    a. Check SD Card, insure properly inserted.

    b. If installing new 64 GB cards, each new 64 GB SD card MUST be formatted prior to inserting into camera hardware unit.

        Click here is download the FAT32 Formatter

    c. After formatting SD card, networks setting MUST be re applied to SD card by way of the PC Manager.

        Click here is download the PC Manager

    d. Never insert or remove SD card while camera has power. Doing so can and will result in damaging SD card, Camera and circuitry within the hardware unit itself.

2. WiFi or Cellular Connectivity
    a. Solid white light indicates network connectivity.

    b. Flashing white lights indicates network/camera unit is searching for network for connectivity.
        i. Unit will not register online without a solid white light
        ii. Check to insure device(s) are getting power
        iii. If so, please re set device

    c. Check connectivity by connecting cell phone or PC to hotspot/cellular device directly

3. Check online to confirm creation of customer account at omnitelematix.com
    a. Insure camera serial numbers and other relevant hardware coincides with account information as populated.

4. Installation is not complete until verified connection and solid white light connecting device to the fleet management system.

5. For any other trouble shooting information, contact your point of sales person directly.

Thank you for your business.